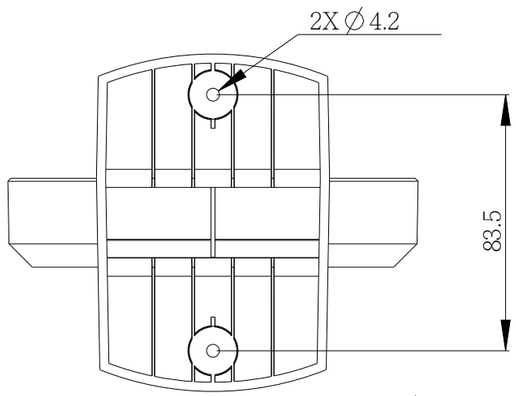

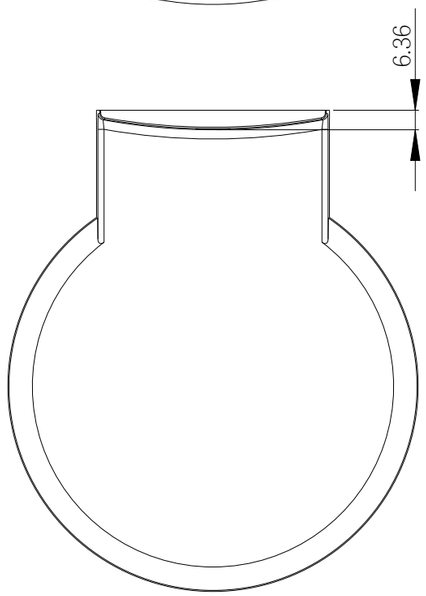

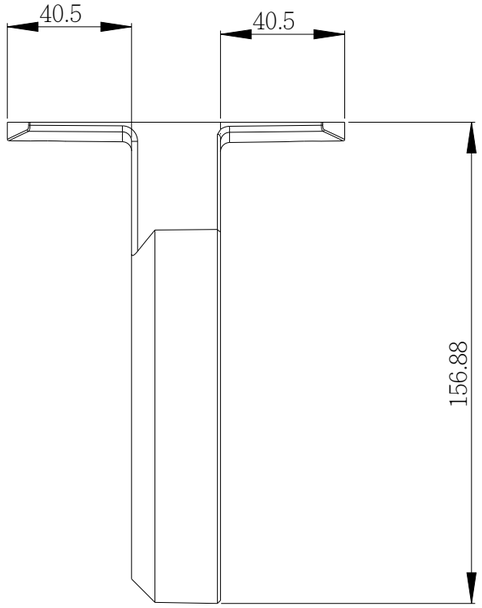
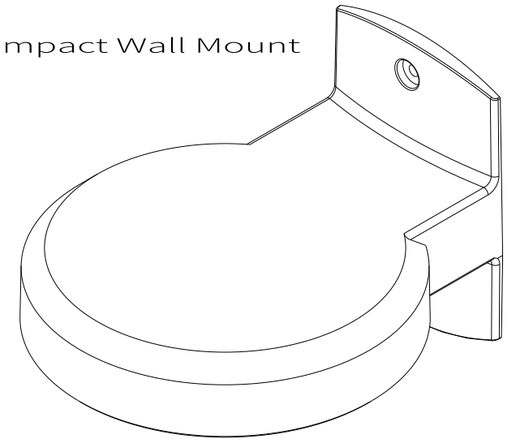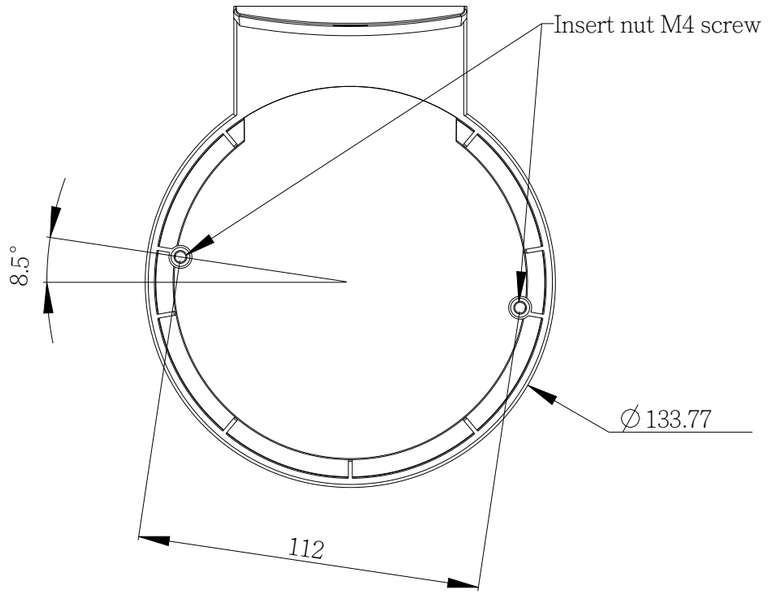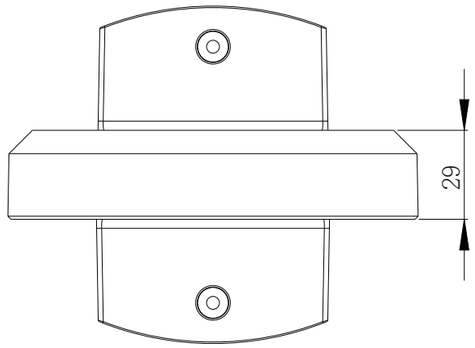
Compact Wall Mount